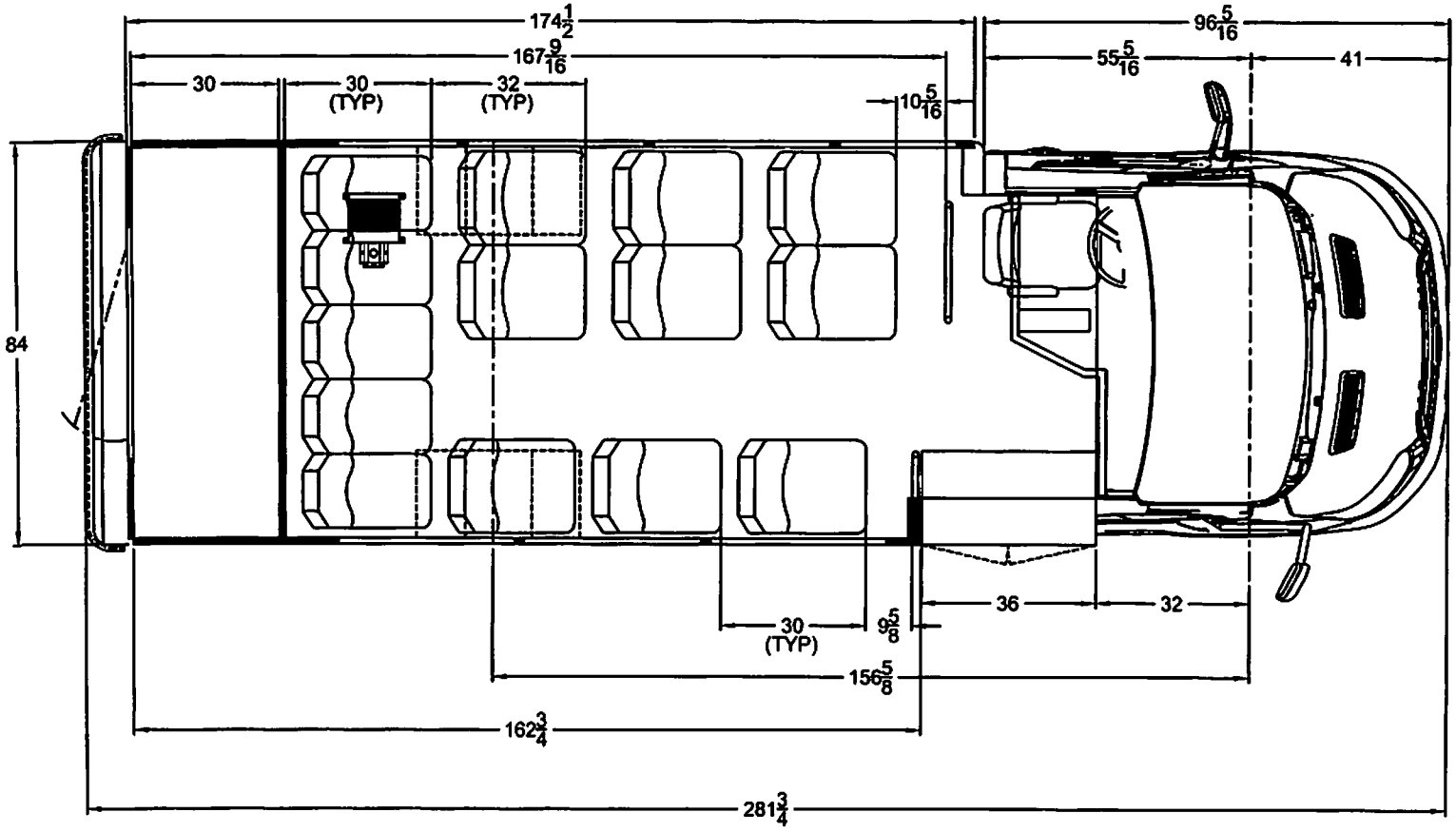

NOTE: SHOWN WITH 19" MID HI FREEDMAN SEATS
TRANSIT 10,360 GVWR
THIS FLOOR PLAN IS FOR ILLUSTRATION PURPOSES ONLY.
A WEIGHT ANALYSIS HAS NOT YET BEEN PERFORMED.
FINAL APPROVAL WITH A WEIGHT ANALYSIS IS REQUIRED UPON RECEIPT OF A COMPLETED ORDER WITH ALL OPTIONS SHOWN.
OPTIONAL EQUIPMENT MAY BE SHOWN.
THE SALES ORDER PLACED DICTATES ACTUAL OPTION CONTENT.

DEALER APPROVAL

☑ APPROVED

CUSTOMER SIGNATURE

SCALE IN INCHES

THIS DRAWING AND THE INFORMATION THEREON ARE THE EXCLUSIVE PROPERTY OF STARCRAFT BUS, A DIVISION OF FOREST RIVER. IT SHALL NOT BE COPIED OR DUPLICATED IN ANY MANNER, NOR SHALL IT BE SUBMITTED TO OUTSIDE PARTIES FOR EXAMINATION WITHOUT OUR WRITTEN CONCENT. IT IS LOANED FOR USE WITH REFERENCE TO WORK UNDER CONTRACT WITH, OR PROPOSALS SUBMITTED TO STARCRAFT BUS, A DIVISION OF FOREST RIVER.

REV. LET.	DESCRIPTION OF CHANGE	BY	CHK	DATE	ECN No.
A	REVISED FLOOR PLAN	TAS		03/08/2017	

TOLERANCE UNLESS OTHERWISE SPECIFIED	
WOOD	OTHER
± 1/8"	± 1/16"
± 1°	± 1/2°

STARCRAFT BUS
a division of Forest River, Inc.

DATE: 03/08/17
NAME: TAS
TITLE: 14 PASS 156 WB MODEL22 TRANSIT
DWG. No. 14 PASS 30 REAR LUGGAGE 156 WB 174 BDY-4 USA